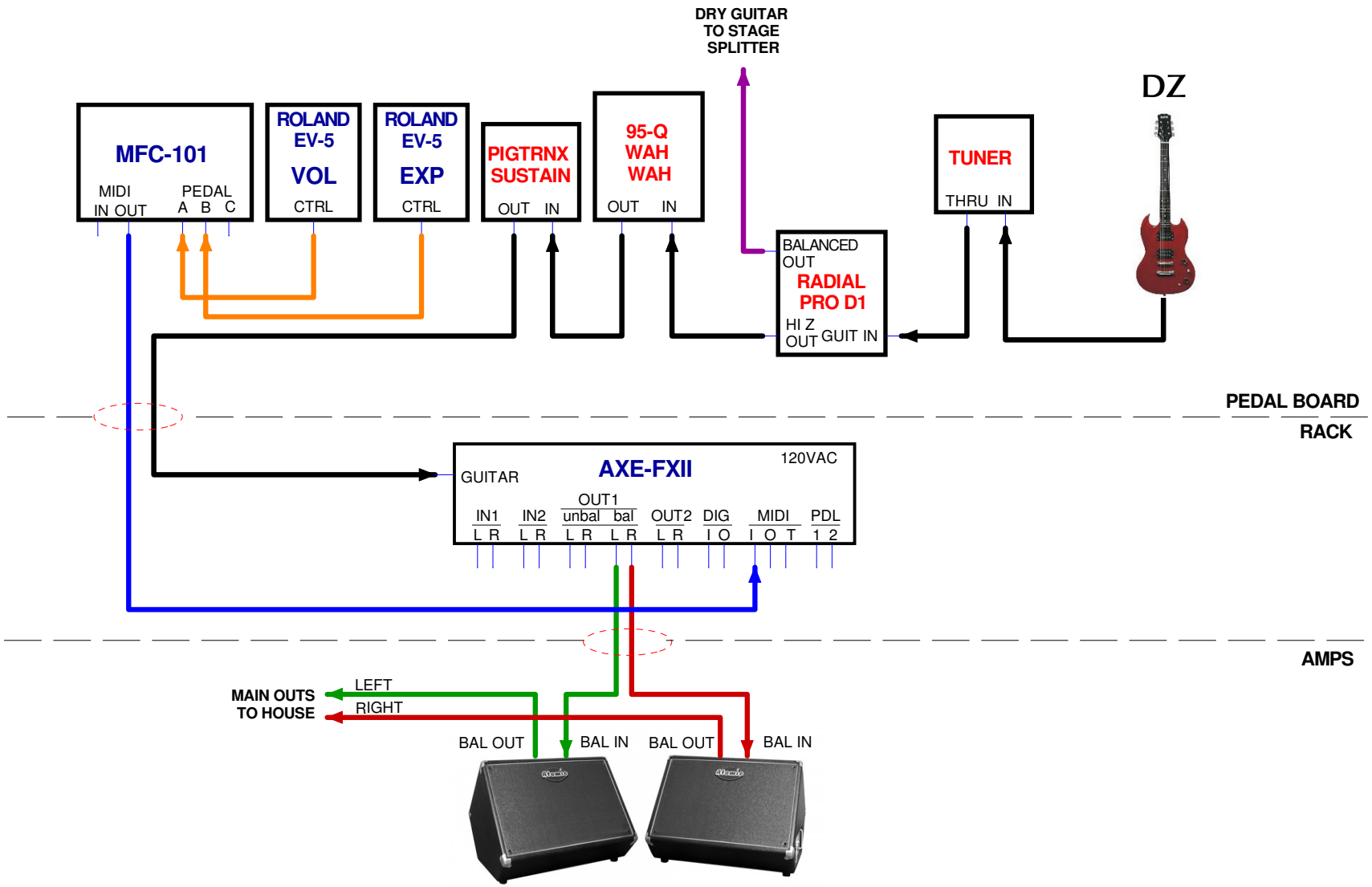

Lectronx Sherman Oaks, California 91423
phone: 818-501-1392 fax: 818-501-4372 http://www.lectronx.com

PROJECT:	DZ 2011 BABY RIG	REV: A	
TITLE:	LIGHT TRAVEL SOLUTION	START DATE:	8/31/2011 2:15:00 PM
DRAWN BY:	Edwin C. Clothier	LAST SAVE:	8/31/2011 6:12:19 PM
FILENAME:	DZ2011babyRIG.sch		